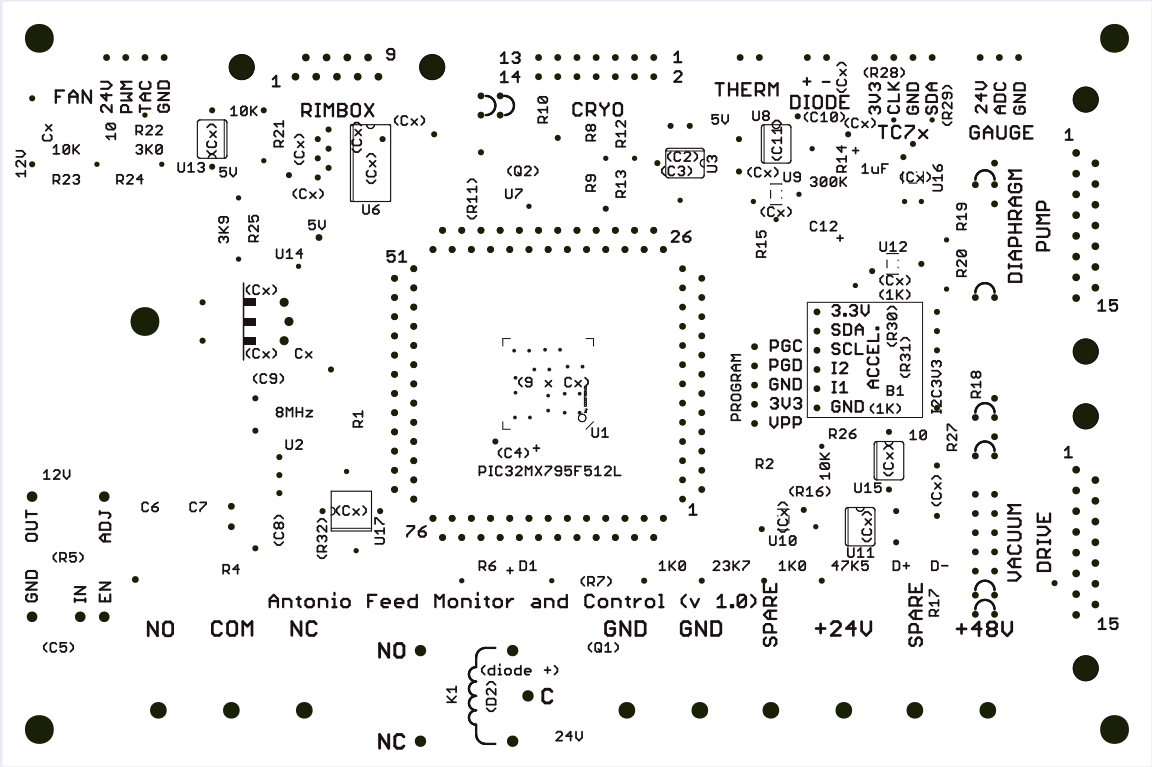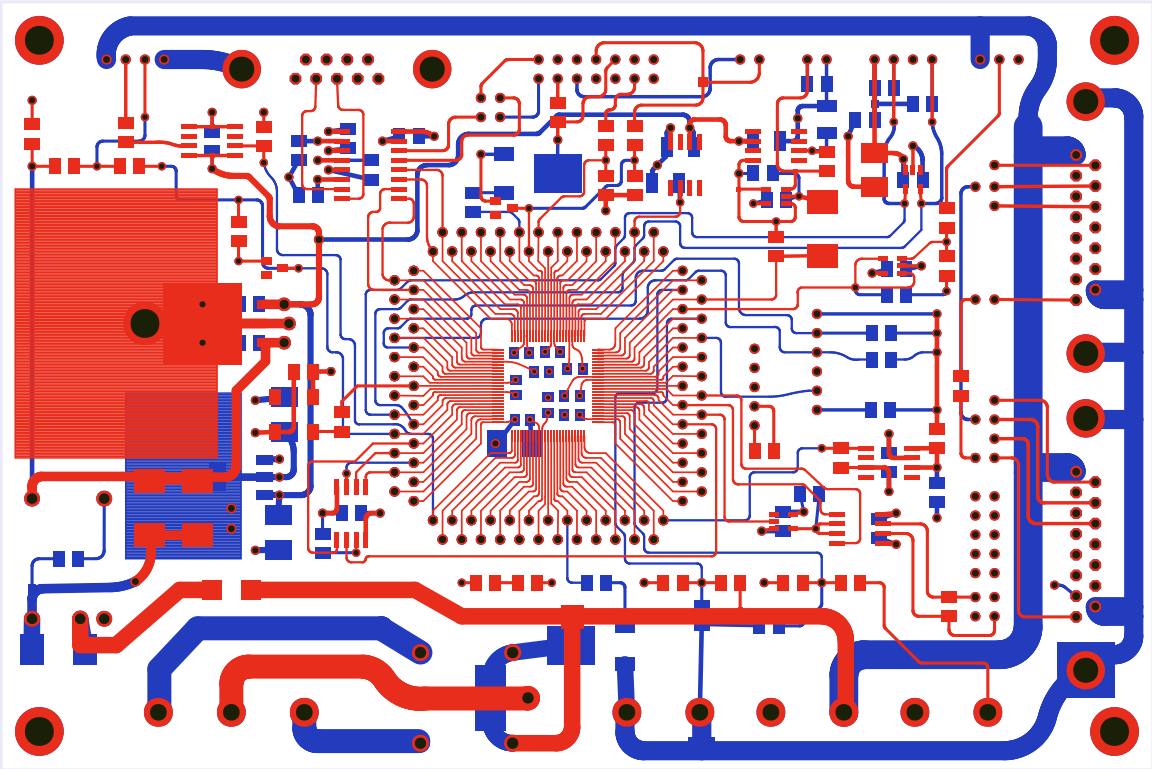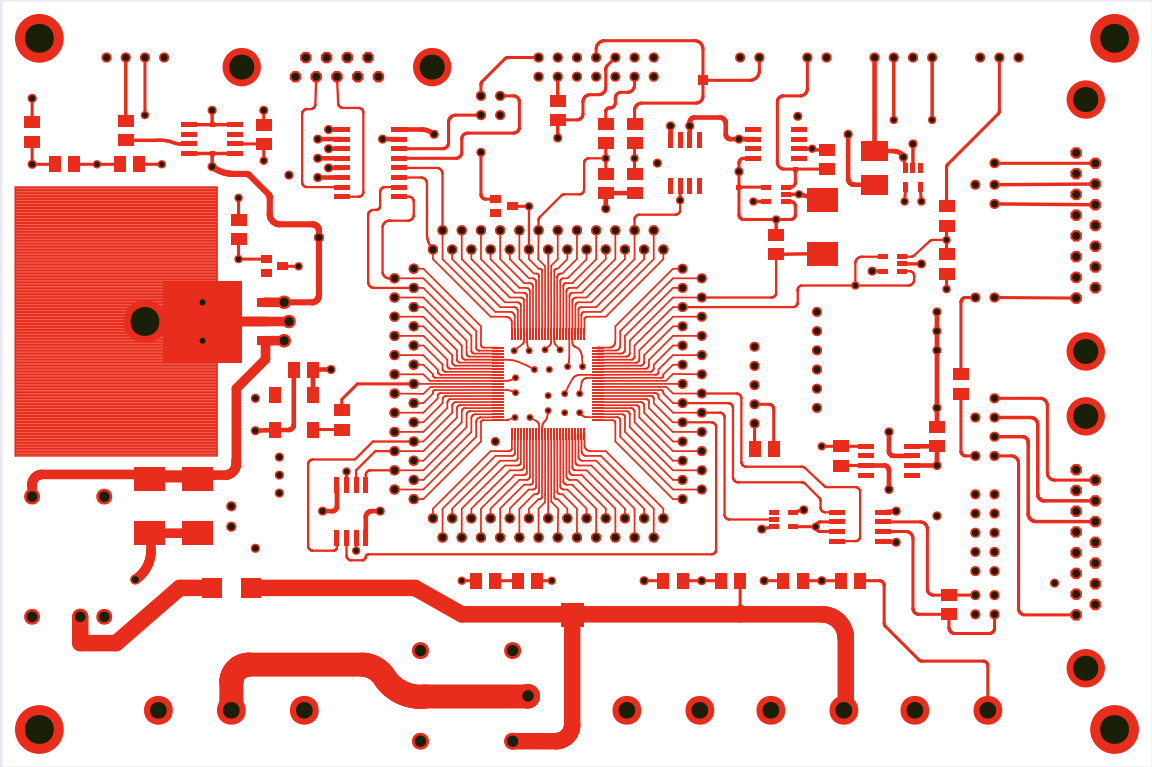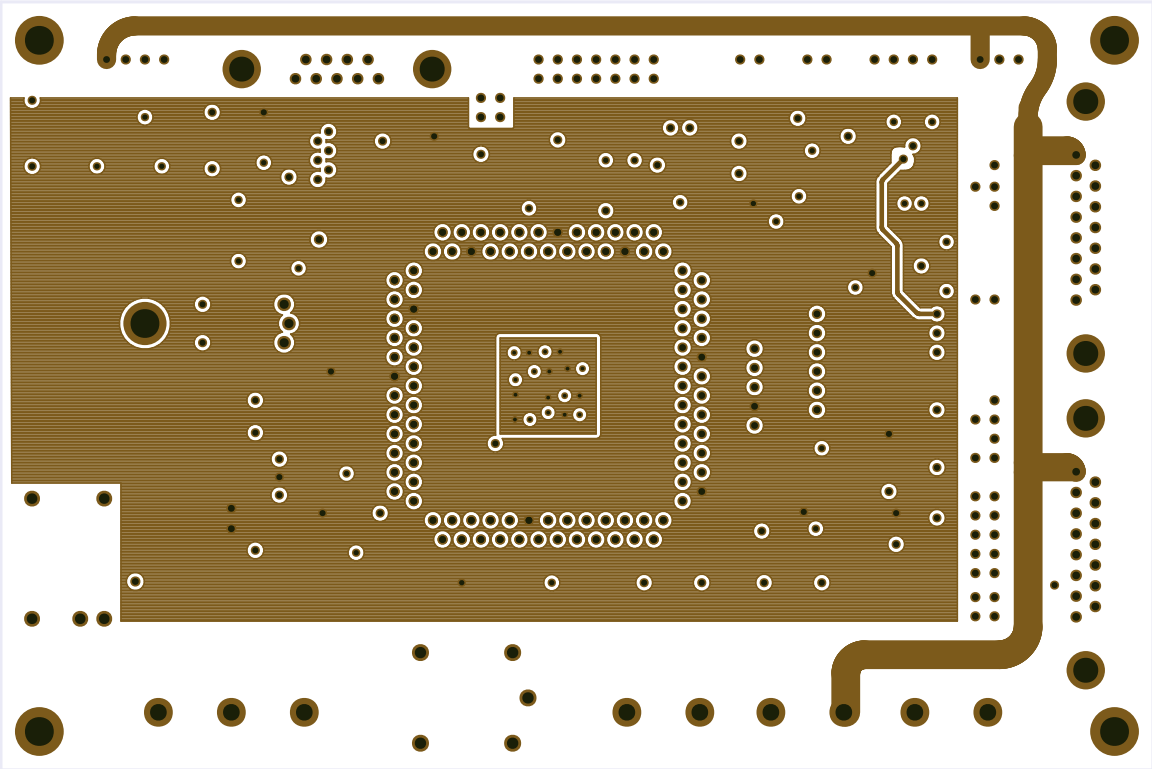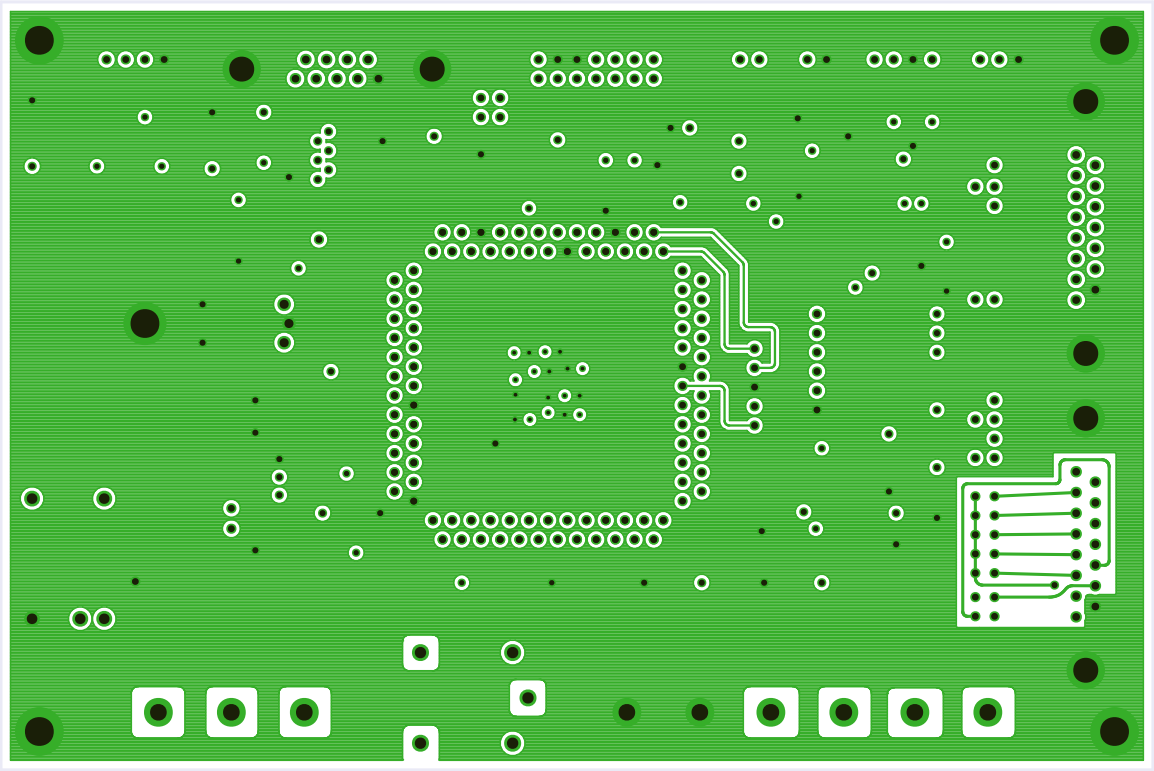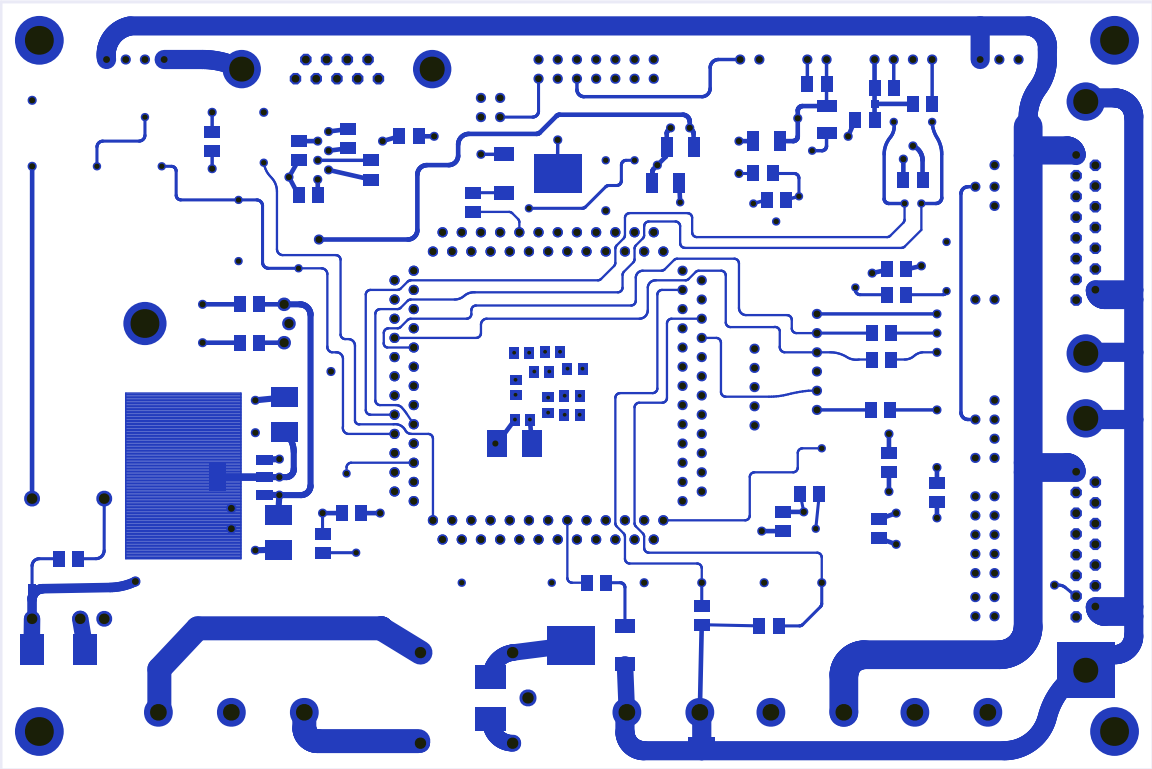
Antonio Feed Monitor and Control (v 1.0)
FAN
24V
PWM
TAC
GND
RIMBOX
CRYO
THERM
DIODE
3V3
CLK
GND
SDA
TC7x
24V
ADC
GND
GAUGE
DIAPHRAGM
PUMP
VACUUM
DRIVE
PIC32MX795F512L
PROGRAM
PGC
PGD
GND
3V3
VPP
ACCEL.
3.3V
SDA
SCL
I2
I1
GND
B1
NO
COM
NC
GND
GND
SPARE
+24V
SPARE
+48V
OUT
ADJ
GND
IN
EN
12V
8MHz
diode +
C
NO
NC
24V